REVISIONS		
ISS	ZONE	DESCRIPTION\PER REQUEST\DATE
V	OPEN	Open drawings to customers

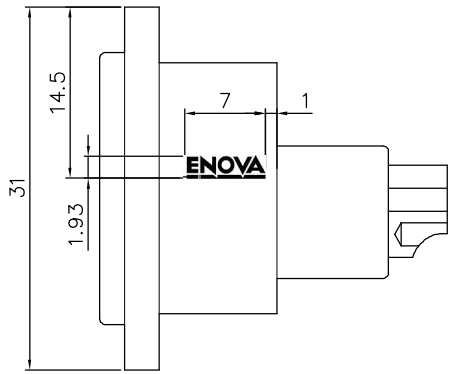

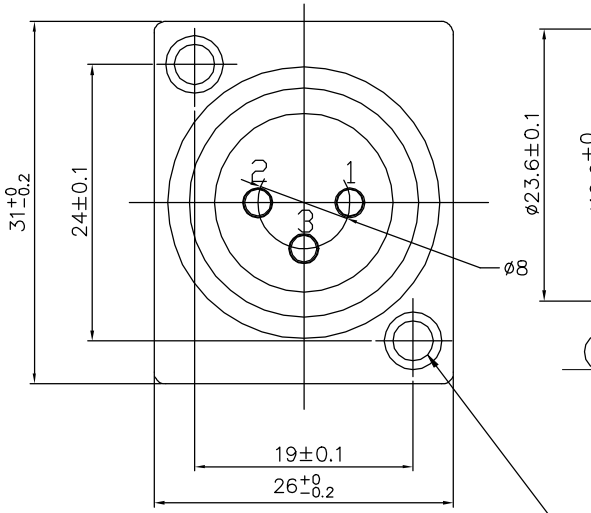

Ø3.5
countersinkingØ5

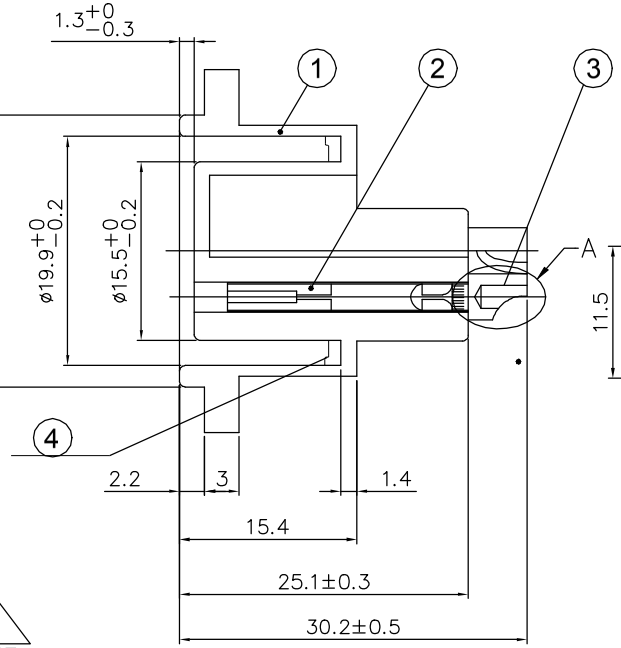

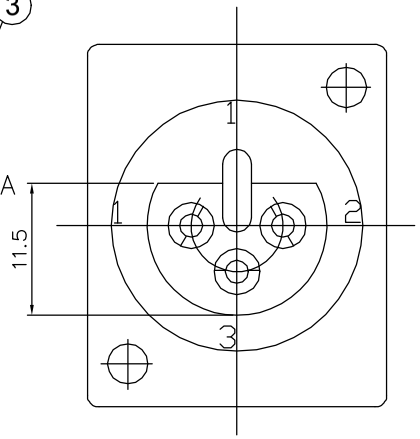

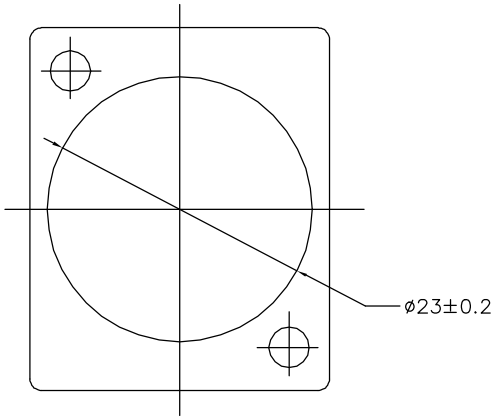

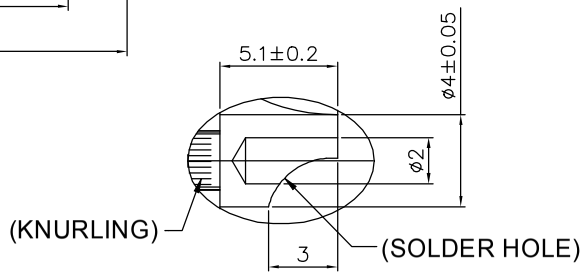

A DETAIL (2/1)

NO.	DESCRIPTION	MATERIAL	FINISH		DRAWING NO.
4	T-WASHER	TPR	ORANGE	1	
3	PIN	H59-1	SILVER	3	
2	FEMALE PIN	PHOSPHOR BRONZE	SILVER	3	
1	BODY	PA	BLACK	1	

DIMENSIONS ARE IN MILLIMETERS
UNLESS OTHERWISE SPECIFIED TOLERANCES
ANGLES = ±5°
UP TO 6 = ±0.2
6–40 = ±0.4
40–120 = ±0.6
120–315 = ±1
ABOVE 315 = ±1.6

THIRD_ANGLE
SCALE 1.5/1

APPROVED DATE
CHECKED DATE
DRAWN HAONANHU DATE 2019-8-27
FILE NO.
ERP LINK:

Connector Distribution GmbH

TITLE
XLR FEMALE CHASSIS CONNECTOR, PLASTIC SOLDER PIN SILVER PLATED

PART NO. XL13FB-W REV. A1