RATINGS AND CHARACTERISTICS

	CARBON		CERMET	
	OPEN 410	ENCLOSED 483	OPEN 482	ENCLOSED 484
Resistance range:	47 ohm-4.7M	100 ohm-4.7M	100 ohm-10Mohm	47 ohm-10Mohm
Standard tolerances:	±20%	±20% and ±10%	±20% and ±10%	±20% and ±10%
Temperature characteristic of resistance: (20° to 70°C) For 100 ohm ≤R ≤470 ohm For 1kohm ≤ R ≤ 2M2 For R = 4, 7Mohm For R < 100 ohm	≤ +300 ppm/°C ≥ −500 ppm/°C	 ±500 ppm/°C ±300 ppm/°C ±1000 ppm/°C	±100 ppm/°C	±100 ppm/°C ±250 ppm/°C
Power rating:	.1 watt @ 40°C .05 watt @ 70°C	.1 watt @40°C .05 watt @ 70°C .025 watt @ 85°C	.5 watt @ 70°C derated linearly to 0 watt @125°C	.5 watt @ 70°C derated linearly to 0 watt @125°C
Operating voltage:	150 V max	150 V max	250 V max	250 V max
Isolation voltage:	220 V	220 V	220 V	220 V
Max. operating temp.	70°C	85°C	125°C	125°C
Vibration severity:	10 Hz to 500Hz 0.75mm or 98 m/s^2 (whichever is less)	10 Hz to 500Hz 0.75mm or 98 m/s^2 (whichever is less)	10 Hz to 500 Hz, 0.75mm or 98 m/s^2 (whichever is less)	10 Hz to 500 Hz, 0.75mm or 98 m/s^2 (whichever is less)
Bump severity:	390m/s^2-4000 bumps		390m/s^2-4000 bumps	390m/s^2-4000 bumps
Limits of resistance change (a to c) (after 1000 h electrical endurance test)	± (10% R + 0.5ohm)	±(10% R + 0.5ohm) ±(20% R + 1ohm) for value 4.7M	± (2% R + 0.2ohm)	± (2% R + 0.2ohm)
Starting torque:	3.5 to 25mNm	1.5 to 10mNm	<30mNm	<30mNm
Running torque:		2 to 10mNm ratio $\frac{max}{min} \leq 3$	3 to 20 mNm	3 to 20 mNm ratio $\frac{max}{min} \leq 3$
Total mechanical travel:	260° ±5°	300° ±5°	235° ±5°	300° ±5°
Effective electrical travel:	200° ±10°	285° ±10°	200° ±10°	285° ±10°
Limiting slider current:	Details of specification available on request	$\frac{Pmax}{\sqrt{Rnom}}$	$\frac{Pmax}{\sqrt{Rnom}}$	$\frac{Pmax}{\sqrt{Rnom}}$
Minimum effective resistance:	≤ 2% R or 10 ohm			
Terminal resistance:	≤ 100 mohm	≤ 2%R or 10 ohm (whichever is greater)	≤ 0.5%R or 2 ohm (whichever is greater)	≤ 0.5%R or 2 ohm, (whichever is greater)

PACKAGING

CARBON		CERMET	
OPEN 410	ENCLOSED 483	OPEN 482	ENCLOSED 484
BULK	BULK or ANTI-STATIC RAILS	BULK	BULK or ANTI-STATIC RAILS

MARKING

OPEN CARBON (410)

The potentiometer is marked with the rated resistance value.

e.g. 220 ohm = 220R
10 kohm = 10K
1 Mohm = 1MO

The rated resistance value is designed in R.K.M. code according to IEC 62 with letter (number) punches on the wiper or knob.

The package is marked with: –code number
–date of production
–quantity

ENCLOSED CARBON (483) / CERMET (484)

The potentiometers are marked with the rated resistance value.

e.g. 220 ohm = 220R
10 kohm = 10K
1 Mohm = 1MO

The rated resistance value is designed in R.K.M. code according to IEC 62 with letter (number) marked with stamping ink on the front side.

The package is marked with: –code number
–date of production
–quantity

OPEN CERMET (482)

The potentiometer is marked with the rated resistance value.

e.g. 220 ohm = 220R
10 kohm = 10K
1 Mohm = 1MO

The rated resistance value is designed in R.K.M. code according to IEC 62 with letter (number) punches on the wiper.

The package is marked with: –code number
–date of production
–quantity

SERIES 2322-410

10mm Open Carbon Trimmers

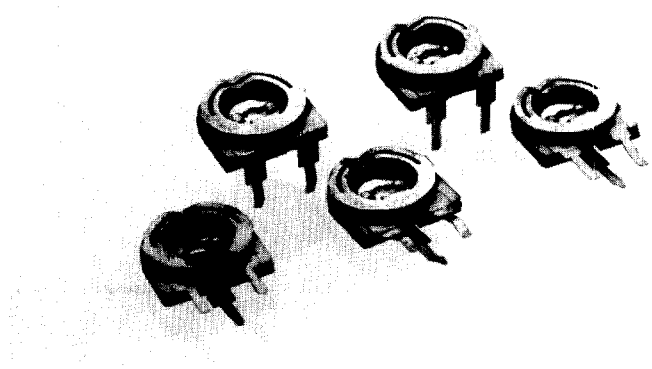

HOW TO SPECIFY

2322 410 X XX XX

Code	Potentiometer Type
0	Without knob
4	Flat knob Type I Rem. 1
6	Flat knob Type II Rem. 2

Code	Version
11	Vertical version Plug-in type Longitudinal slot (raised version)

Code	Version
33	Horizontal version Plug-in type Longitudinal slot
50	Vertical version Plug-in type Longitudinal slot (normal version)

Code	Resistance Value
51	100Ω
52	220Ω
53	470Ω
54	1kΩ
55	2,2kΩ
56	4,7kΩ
57	10kΩ
58	22kΩ
59	47kΩ
61	100kΩ
62	220kΩ
63	470kΩ
64	1MΩ
65	2,2MΩ
66	4,7MΩ
69	330Ω
91	47Ω

Rem. 1:
Designed for
versions: 2322 410 050

Rem. 2:
Designed for
versions: 2322 410 011
033

SERIES 2322-410

10mm Open Carbon Trimmers

2322-410-011

Note: — Surfaces marked with "S" are solderable.
— No dimensions for gauging.
— Dimensions in mm.

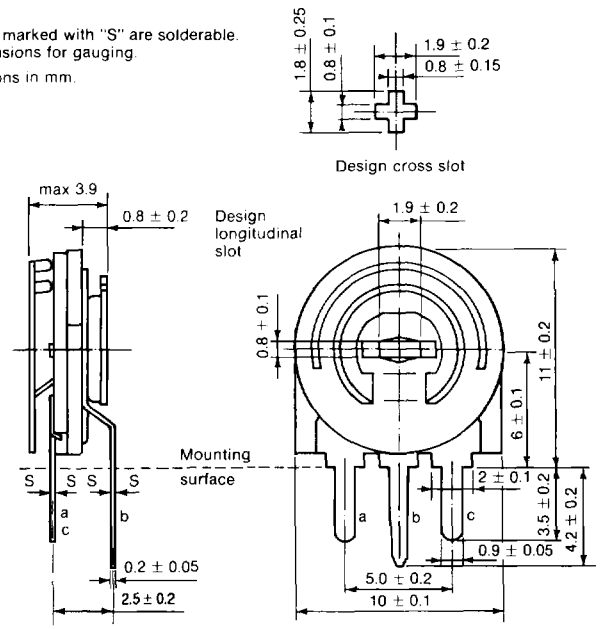

Hole pattern for P.W. board
- Pierced component hole: Ø 1mm
- P.W.-board thickness 1.6 +0.24/−0.14

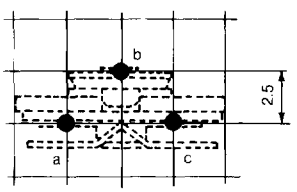

7

Cermet Trimmers

Mepcopal Company • 11468 Sorrento Valley Road • San Diego, CA 92121 • (619) 453-0332 • FAX: (619) 481-1123

SERIES 2322-410

10mm Open Carbon Trimmers

Note: — Surfaces marked with "S" are solderable.
— No dimensions for gauging.
— Dimensions in mm.

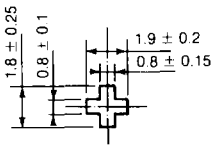

Design cross slot

2322-410-050

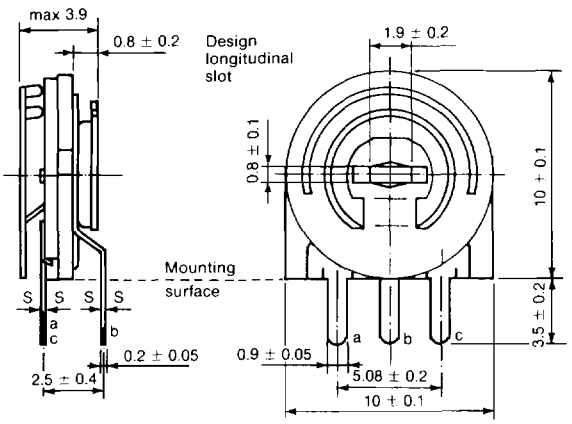

Hole pattern
for P.W. board
- Pierced component hole: Ø 1mm
- P.W.-board thickness 1.6 +0.24/-0.14

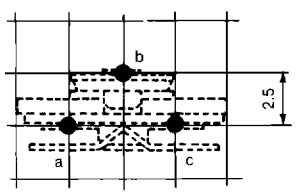

Note: — Surfaces marked with "S" are solderable.
— No dimensions for gauging.
— Dimensions in mm.

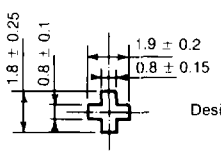

Design cross slot

2322-410-033

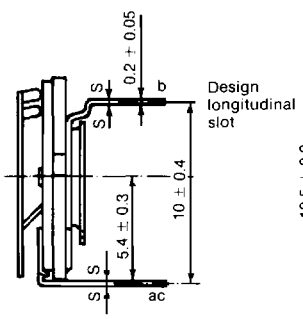

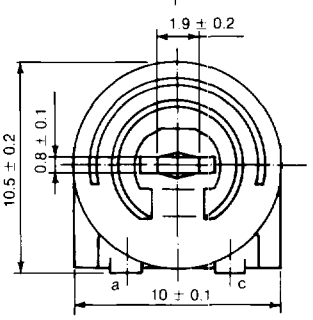

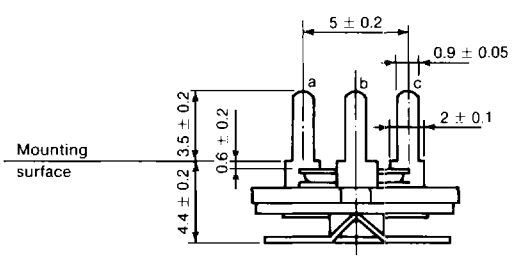

Hole pattern
for P.W. board
- Pierced component hole: Ø 1mm
- P.W.-board thickness 1.6 +0.24/-0.14

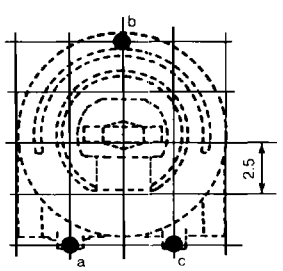

7

Cermet Trimmers

SERIES 2322-410

10mm Open Carbon Trimmers

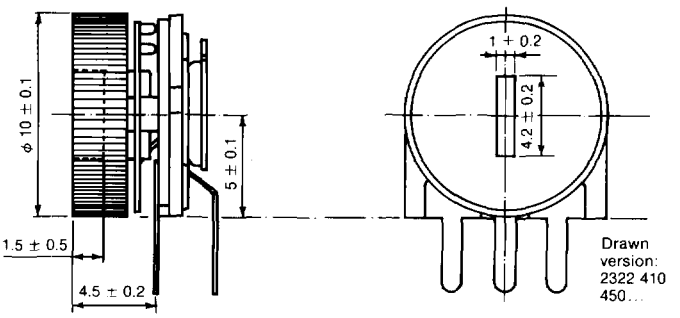

2322-410-450

Note: — No dimensions for gauging.
For other data see Appendix A.

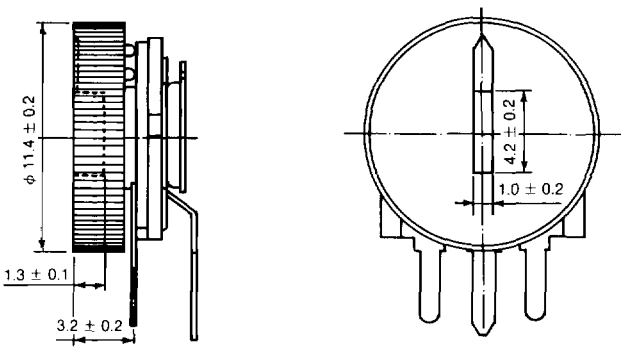

2322-410-611

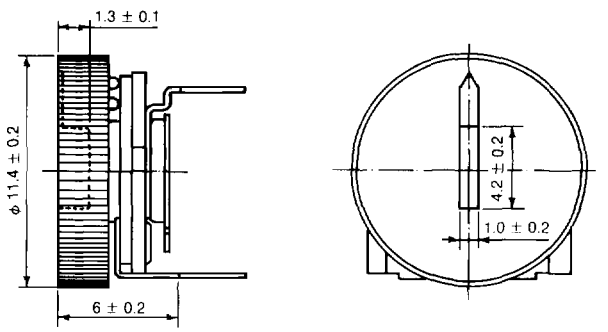

2322-410-633

These potentiometers offer stable, high quality performance and can be mounted by automatic insertion machines. They are designed for video, audio and industrial applications. Versions with a knob to facilitate adjustment are available.

SERIES 2322-483

10mm Enclosed Carbon Trimmers

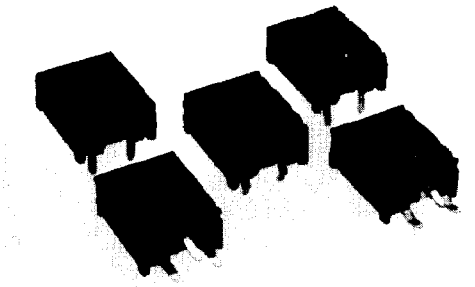

HOW TO SPECIFY

2 3 2 2 483 X X XXX

Code	Potentiometer Type
0 Rem.1	Vertical Non-Insulated cross slot
1	Vertical Insulated hexagonal slot
2	Vertical Insulated cross slot
5	Horizontal Non-insulated cross slot
6	Horizontal Insulated hexagonal slot
7	Horizontal Insulated cross slot

Rem. 1:
No snap-in tags.

Code	Law + Tolerance – Type PW Tags – Packaging
0	–
1	–
2	LIN ±20% Snap-in tags Bulk packaging
3	LIN ±10% Snap-in tags Bulk packaging
4	LIN ±20% Slide tags Bulk packaging
5	LIN ±10% Slide tags Bulk packaging
6	LIN ±20% Snap-in tags Rail packaging
7	LIN ±10% Snap-in tags Rail packaging
8	LIN ±20% Slide tags Rail packaging
9	LIN ±10% Slide tags Rail packaging

Code	Resistance Value
101	100Ω
221	220Ω
471	470Ω
102	1kΩ
222	2,2kΩ
472	4,7kΩ
103	10kΩ
223	22kΩ
473	47kΩ
104	100kΩ
224	220kΩ
474	470kΩ
105	1MΩ
225	2,2MΩ
475	4,7MΩ

These potentiometers are for preset resistance control with provisions for readjustment. They are particularly suitable for use in radio and television receivers. This series includes types for vertical and horizontal mounting on printed circuit boards. Snap-in pins and cross slot are available on request.

SERIES 2322-483

10mm Enclosed Carbon Trimmers

2322-483-02 . . . thru 09

Vertical version, non-insulated hot wiper with cross slot.

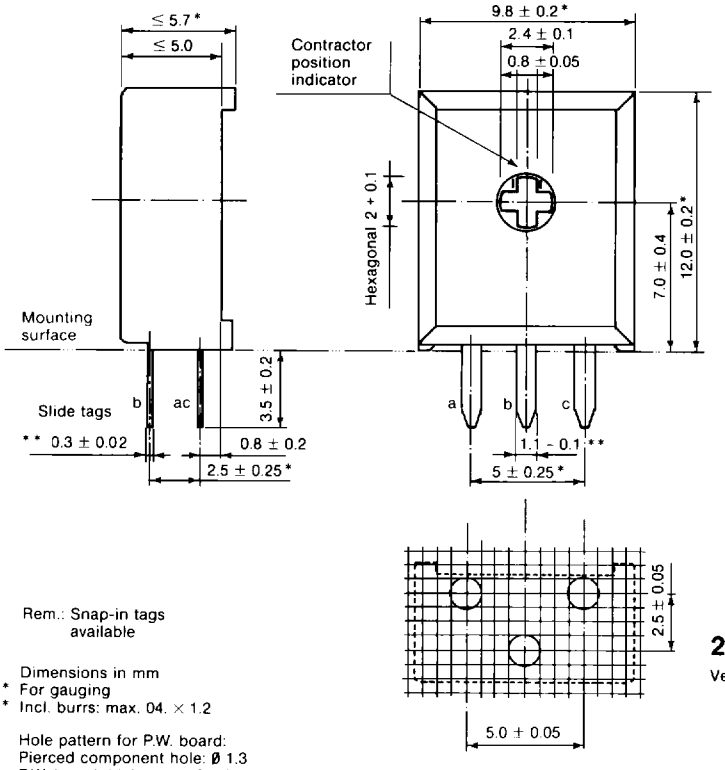

Rem.: Snap-in tags available

Dimensions in mm
* For gauging
** Incl. burrs: max. 04. × 1.2

Hole pattern for P.W. board:
Pierced component hole: Ø 1.3
P.W. board thickness: 1.6 + 0.24 - 0.14

2322-483-12 . . . to/incl. 19

Vertical version, insulated cold wiper with hexagonal slot.

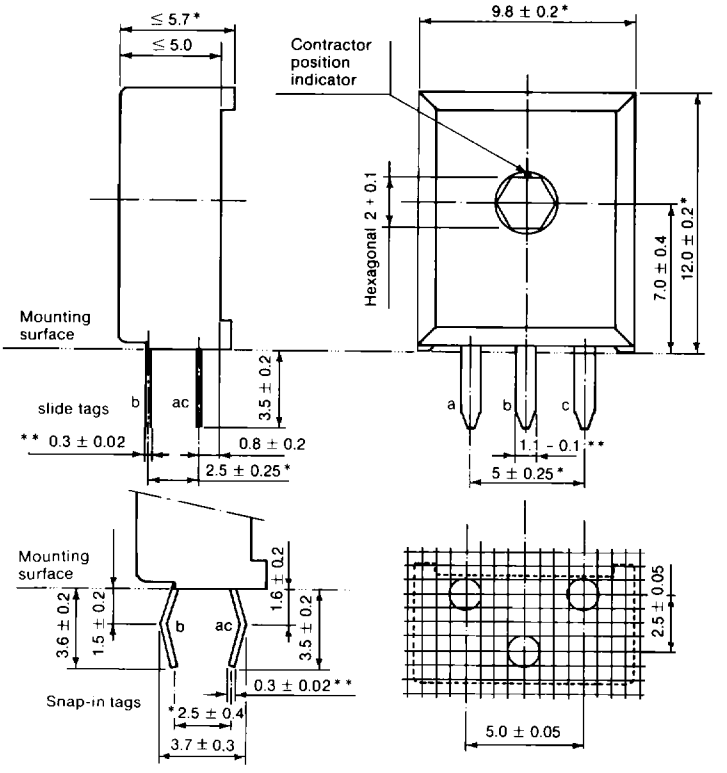

Hole pattern for P.W. board:
Pierced component hole: Ø 1.3
P.W. board thickness: 1.6 + 0.24 - 0.14

Dimensions in mm
* For gauging
** Incl. burrs: max. 04. × 1.2

7

Cermet Trimmers

Mepcopal Company • 11468 Sorrento Valley Road • San Diego, CA 92121 • (619) 453-0332 • FAX: (619) 481-1123

2322-483-22 . . . thru 29

Vertical version, insulated cold wiper with cross slot.

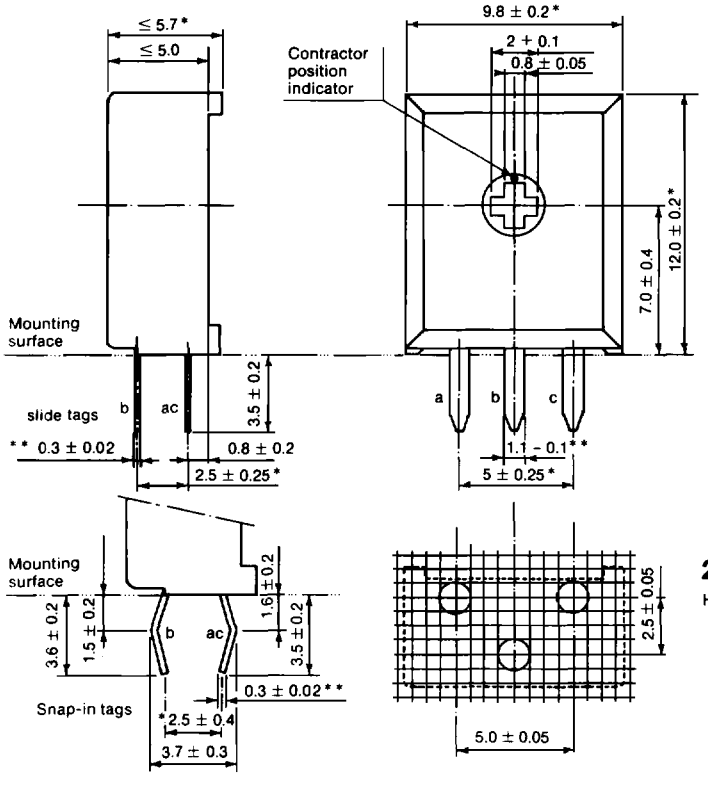

Hole pattern for P.W. board:
Pierced component hole: Ø 1.3
P.W. board thickness: 1.6 + 0.24
- 0.14

Dimensions in mm
* For gauging
** Incl. burrs: max. 04. × 1.2

2322-483-52 . . . thru 59

Horizontal version, non-insulated hot wiper with cross slot.

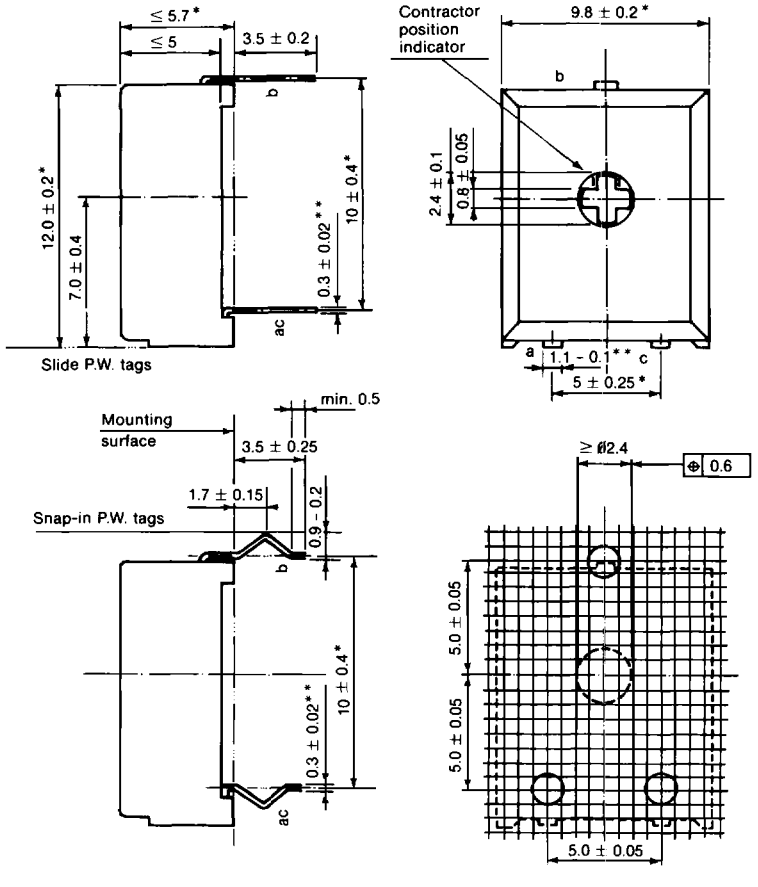

Hole pattern for P.W. board:
Pierced component hole: Ø 1.3
P.W. board thickness: 1.6 + 0.24
- 0.14

Dimensions in mm
* For gauging
** Incl. burrs: max. 04. × 1.2

SERIES 2322-483

10mm Enclosed Carbon Trimmers

2322-483-62 . . . thru 69

Horizontal version, insulated cold wiper with hexagonal slot.

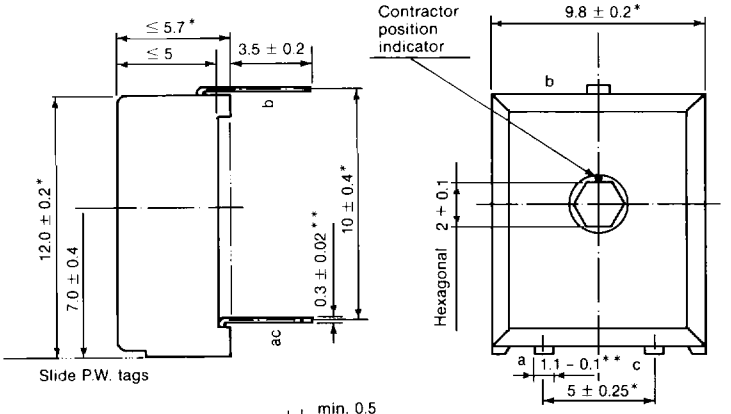

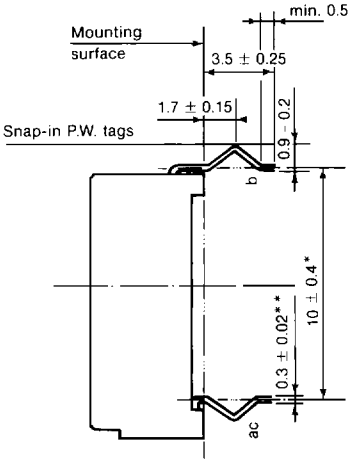

Hole pattern for P.W. board:
Pierced component hole: Ø 1.3
P.W. board thickness: 1.6 + 0.24 - 0.14

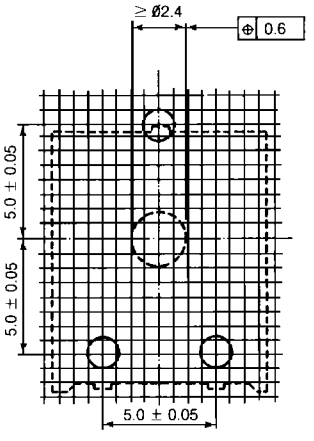

Dimensions in mm
* For gauging
** Incl. burrs: max. 04. × 1.2

2322-483-72 . . . thru 79

Horizontal version, insulated cold wiper with cross slot.

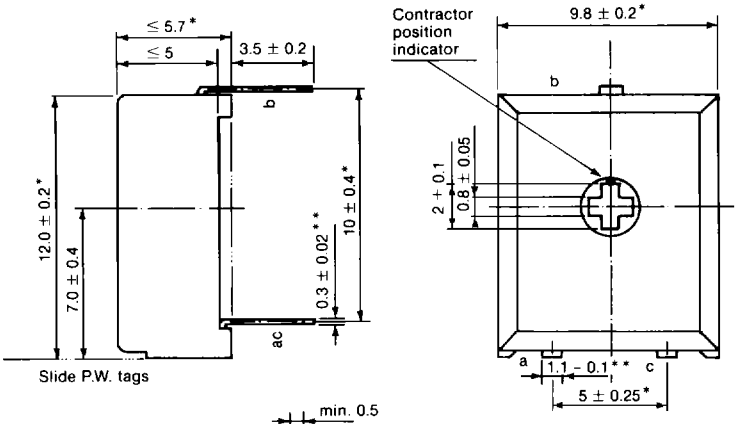

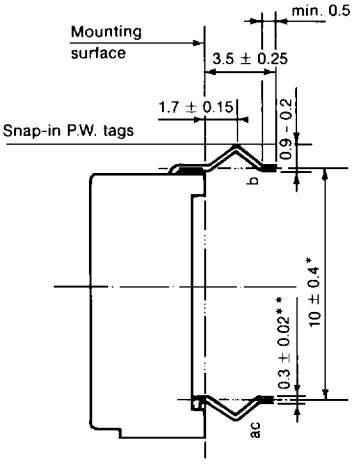

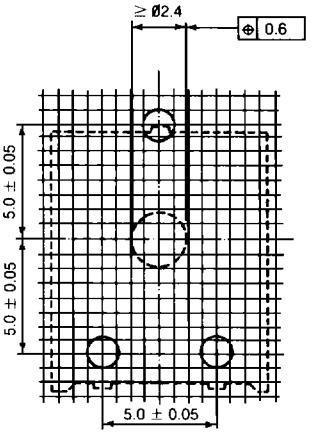

Hole pattern for P.W. board:
Pierced component hole: Ø 1.3
P.W. board thickness: 1.6 + 0.24 - 0.14

Dimensions in mm
* For gauging
** Incl. burrs: max. 04. × 1.2

7

Cermet Trimmers

Mepcopal Company • 11468 Sorrento Valley Road • San Diego, CA 92121 • (619) 453-0332 • FAX: (619) 481-1123

SERIES 2322-482

10mm Open Cermet Trimmers

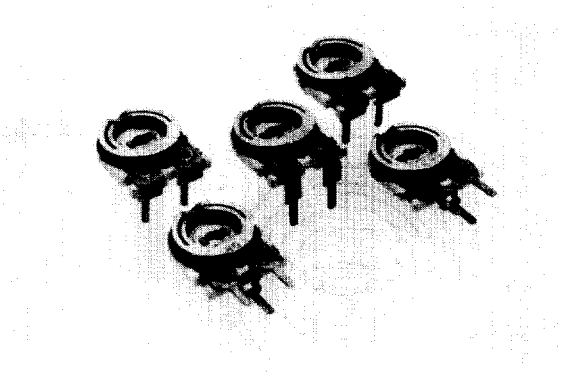

HOW TO SPECIFY

2322 482 X X XXX

Code	Potentiometer Type
2	Horizontal (asymmetric) Longitudinal slot
3	Vertical Longitudinal slot
4	Horizontal (symmetric) Longitudinal slot
6	Horizontal (asymmetric) Cross slot
7	Vertical Cross slot
8	Horizontal (symmetric) Cross slot

Code	Tolerance	Law
0	20%	Lin
2	10%	Lin

Code	Resistance Value
101	100Ω
151	150Ω
221	220Ω
331	330Ω
471	470Ω
681	680Ω
102	1kΩ
152	1,5kΩ
222	2,2kΩ
332	3,3kΩ
472	4,7kΩ
682	6,8kΩ
103	10kΩ
153	15kΩ
223	22kΩ
333	33kΩ
473	47kΩ
683	68kΩ
104	100kΩ
154	150kΩ
224	220kΩ
334	330kΩ
474	470kΩ
684	680kΩ
105	1MΩ
155	1,5MΩ
225	2,2MΩ
335	3,3MΩ
475	4,7MΩ
685	6,8MΩ
106	10MΩ

These potentiometers are for preset resistance control with provision for re-adjustments. They are particularly suitable for use in professional apparatus and/or in those applications where stability is of extreme importance. They are available in versions for horizontal and vertical mounting on printed circuit boards.

SERIES 2322-482

10mm Open Cermet Trimmers

2322 482 3 . . . . (Longitudinal slot) and 7 . . . . (cross slot)

Surfaces marked with "S" are solderable.

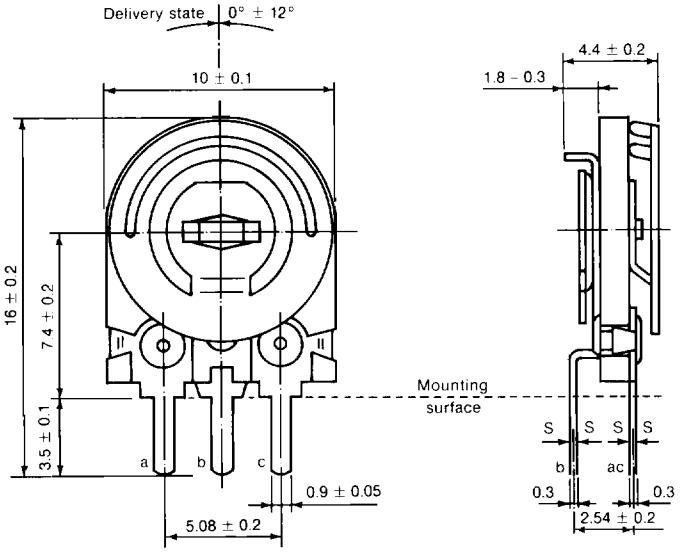

Hole pattern for mounting on a printed wiring-board.

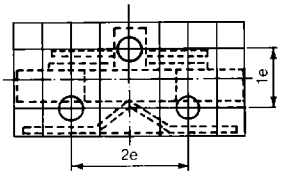

e = 2.54mm
Hole dia : 1.3 ± 0.13mm
All dimensions in mm.

Design actuating slot

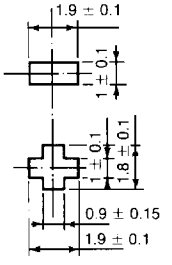

Note: — Surfaces marked with "S" are solderable.

2322 482 4 . . . . (Longitudinal slot) and 8 . . . . (cross slot)

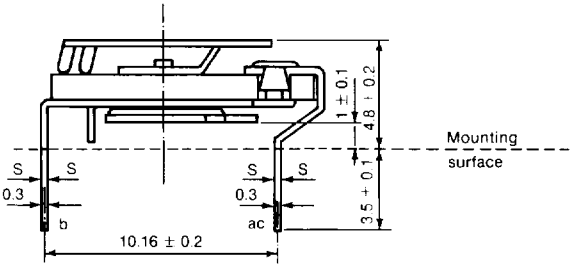

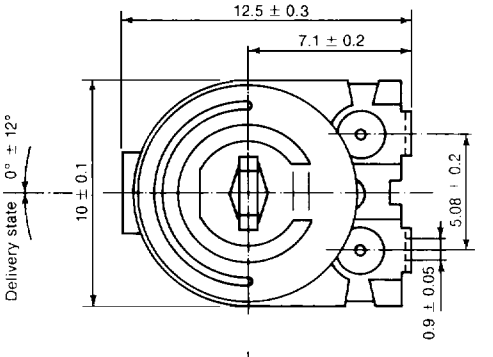

Design actuating slots

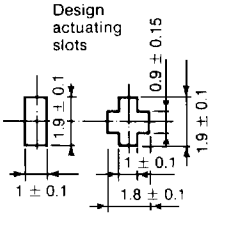

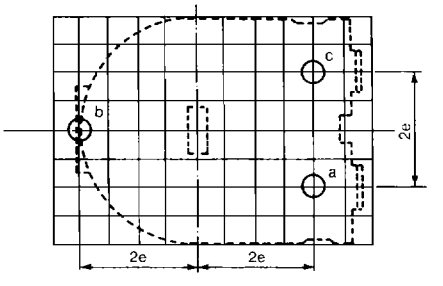

e = 2.54mm
Hole pattern for mounting on a printed wiring boa
Hole dia: 1.3 ± 0.13mm
Dimensions in mm.

7

Cermet Trimmers

Mepcopal Company • 11468 Sorrento Valley Road • San Diego, CA 92121 • (619) 453-0332 • FAX: (619) 481-1123

SERIES 2322-484

10mm Enclosed Cermet Trimmers

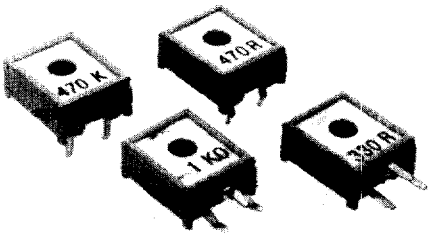

HOW TO SPECIFY

2322 484 X X XXX

Code	Potentiometer Type
–	–
1	Vertical Insulated hexagonal slot
2	Vertical Insulated cross slot
–	–
6	Horizontal Insulated hexagonal slot
7	Horizontal Insulated cross slot

Code	Law + Tolerance – Type PW Tags – Packaging
0	–
1	–
2	LIN ±20% Snap-in tags Bulk packaging
3	LIN ±10% Snap-in tags Bulk packaging
4	LIN ±20% Slide tags Bulk packaging
5	LIN ±10% Slide tags Bulk packaging
6	LIN ±20% Snap-in tags Rail packaging
7	LIN ±10% Snap-in tags Rail packaging
8	LIN ±20% Slide tags Rail packaging
9	LIN ±10% Slide tags Rail packaging

Code	Resistance Value
479	47Ω
689	68Ω
101	100Ω
151	150Ω
221	220Ω
331	330Ω
471	470Ω
681	680Ω
102	1kΩ
152	1,5kΩ
222	2,2kΩ
332	3,3kΩ
472	4,7kΩ
682	6,8kΩ
103	10kΩ
153	15kΩ
223	22kΩ
333	33kΩ
473	47kΩ
683	68kΩ
104	100kΩ
154	150kΩ
224	220kΩ
334	330kΩ
474	470kΩ
684	680kΩ
105	1MΩ
155	1,5MΩ
225	2,2MΩ
335	3,3MΩ
475	4,7MΩ
685	6,8MΩ
106	10MΩ

These potentiometers offer stable high quality performance and can be mounted by automatic insertion machines. They are designed for video, audio, and industrial applications. Versions for vertical and horizontal mounting are available. A hexagonal slot version can be provided with a knob to facilitate manual adjustment.

SERIES 2322-484

10mm Enclosed Cermet Trimmers

2322 484 22 . . . to/incl. 29 . . .

Vertical version, insulated cold wiper with cross slot.

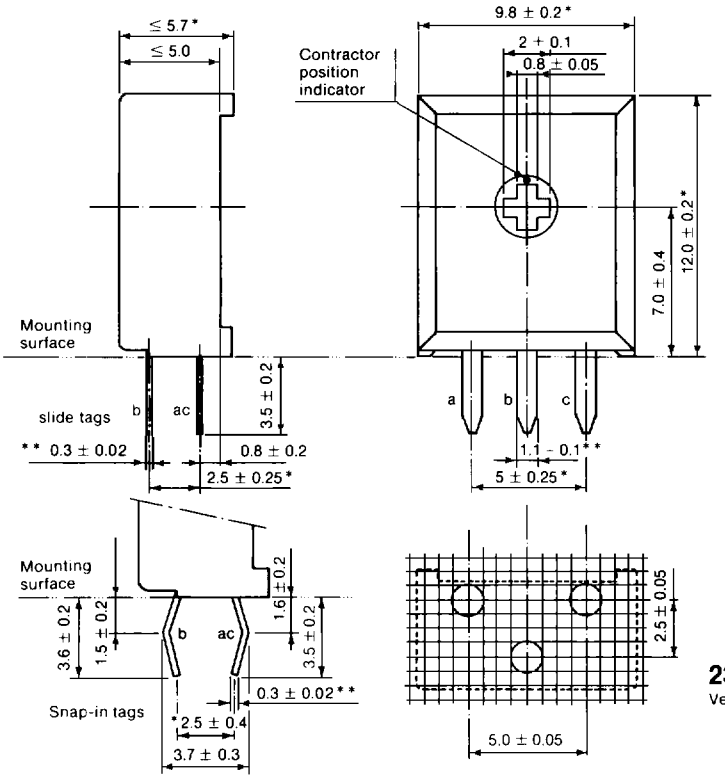

Hole pattern for P.W. board:
Pierced component hole: Ø 1.3
P.W. board thickness: 1.6 + 0.24
- 0.14

Dimensions in mm
* For gauging
** Incl. burrs: max. 04. × 1.2

2322 484 12 . . . to/incl. 19 . . .

Vertical version, insulated cold wiper, hexagonal slot.

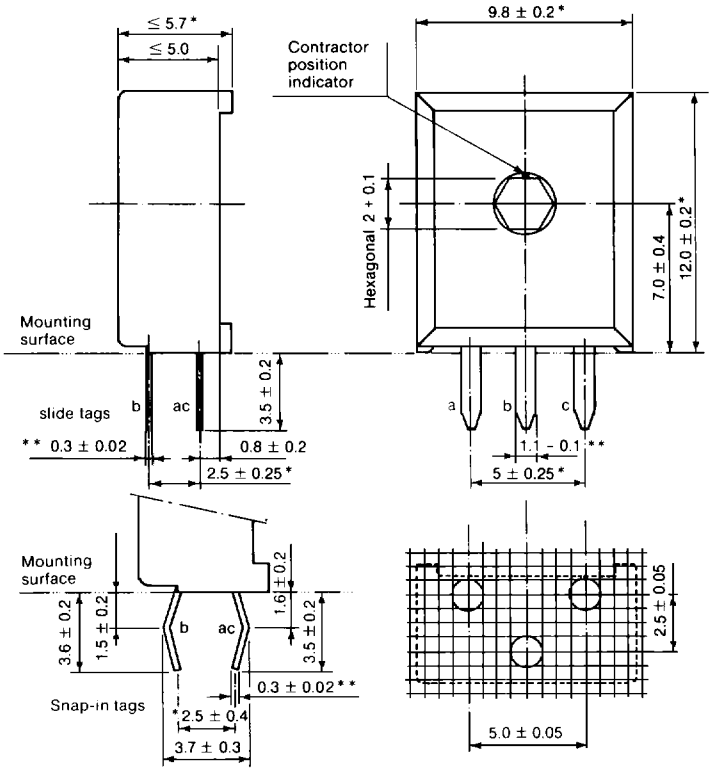

Hole pattern for P.W. board:
Pierced component hole: Ø 1.3
P.W. board thickness: 1.6 + 0.24
- 0.14

Dimensions in mm
* For gauging
** Incl. burrs: max. 04. × 1.2

7

Cermet Trimmers

Mepcopal Company • 11468 Sorrento Valley Road • San Diego, CA 92121 • (619) 453-0332 • FAX: (619) 481-1123

2322 484 72 . . . thru 79 . . .

Horizontal version, insulated cold wiper with cross slot.

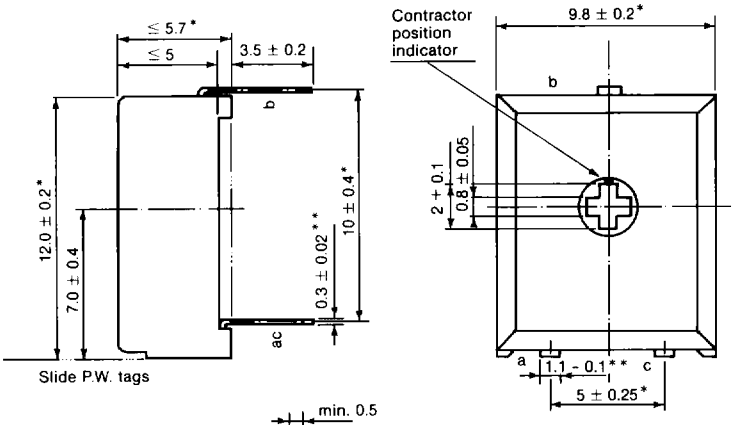

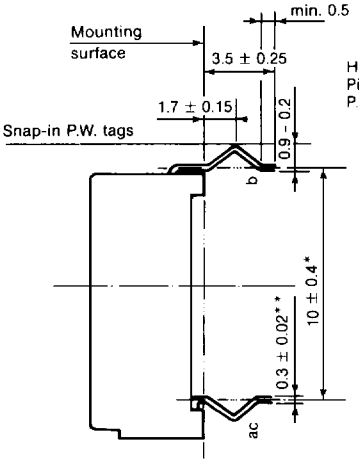

Hole pattern for P.W. board:
Pierced component hole: Ø 1.3
P.W. board thickness: 1.6 + 0.24
- 0.14

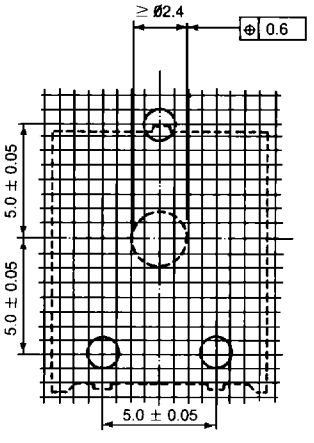

Dimensions in mm
* For gauging
** Incl. burrs: max. 04. × 1.2

2322 484 62 . . . thru 69 . . .

Horizontal version, insulated cold wiper with hexagonal slot.

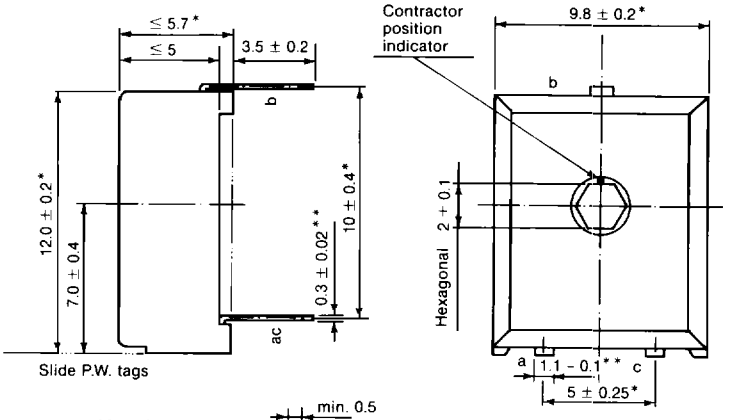

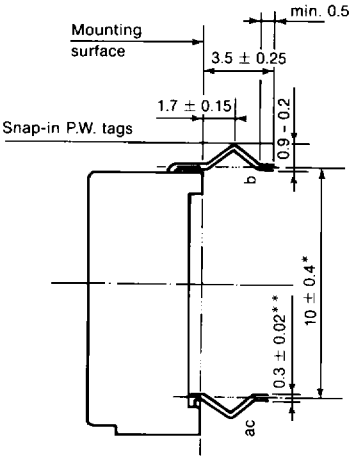

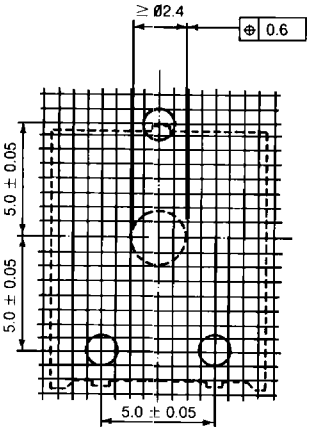

Hole pattern for P.W. board:
Pierced component hole: Ø 1.3
P.W. board thickness: 1.6 + 0.24
- 0.14

Dimensions in mm
* For gauging
** Incl. burrs: max. 04. × 1.2