IC and Module Outlines (cont'd)

Fig. L70 — 15-Pin SIP-M

ECG
1219
1329
1344

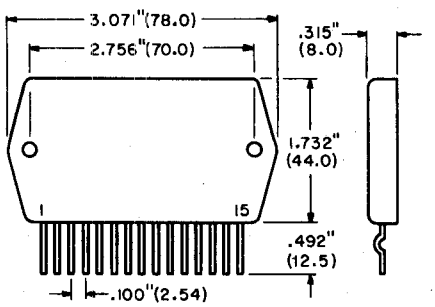

Fig. L70A — 15-Pin SIP-M

ECG
1870 7075

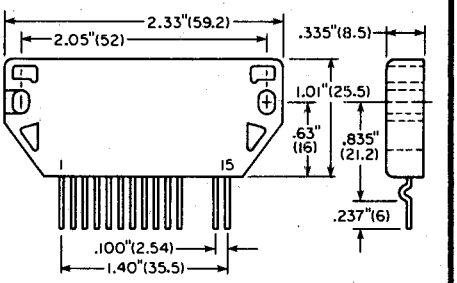

Fig. L70B — 15-Pin SIP-M

ECG
1882 7031

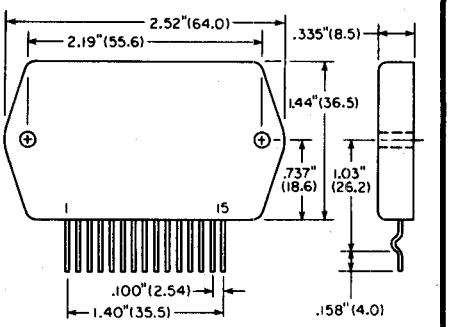

Fig. L71 — 16-Pin SIP-M

ECG
1252

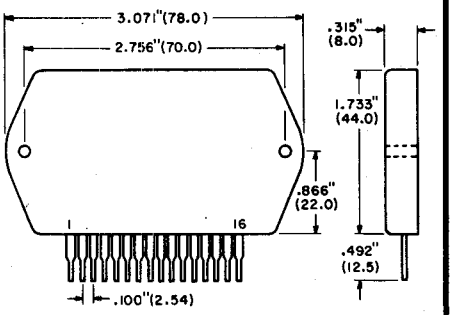

Fig. L72 — 16-Pin SIP-M

ECG
1336

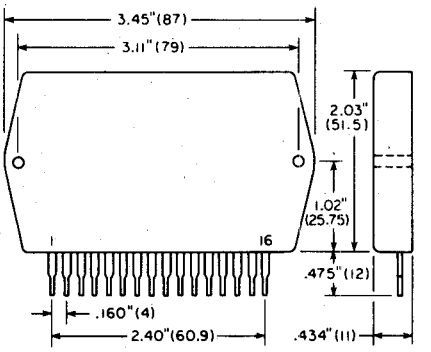

Fig. L72A — 16-Pin SIP

ECG
1825

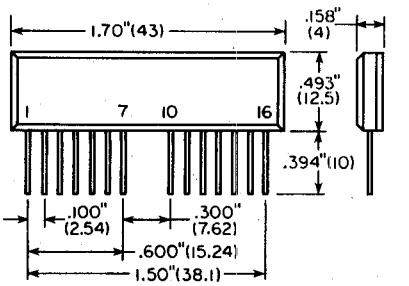

Fig. L73 — 16-Pin SIP-M

ECG
1330 1345 1356 1875
1331 1347 1820

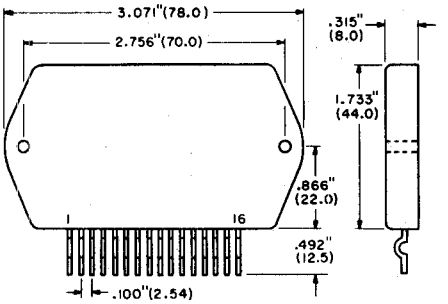

Fig. L75 — 16-Pin SIP

ECG
1351

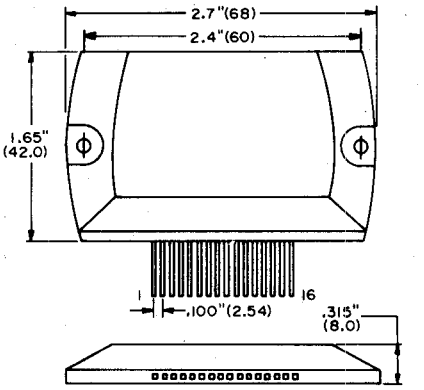

Fig. L75A — 18-Pin SIP-M

ECG
1736

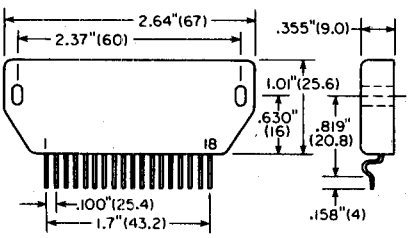

Fig. L75B — 18-Pin SIP-M

ECG
1317 1816 1818 1871 1877
1737 1817 1819 1874 1885

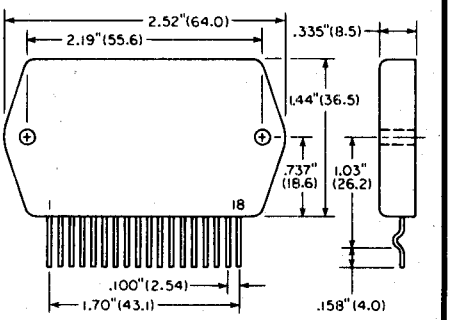

Fig. L75C — 18-Pin SIP-M
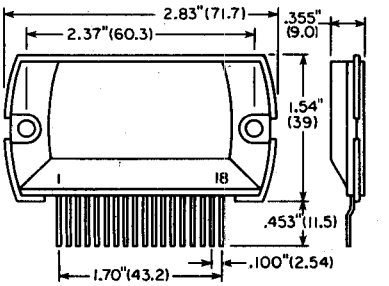
ECG
1848