IC and Module Outlines (cont'd)

Fig. L57 — 12-Pin SIP

ECG
1368 1626
1389 1638

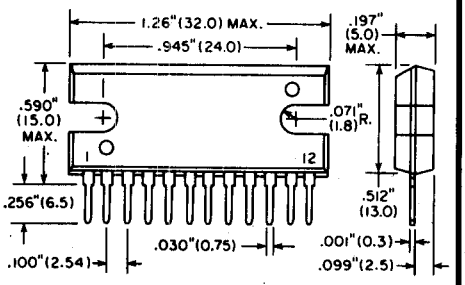

Fig. L57A — 12-Pin SIP

ECG
1707

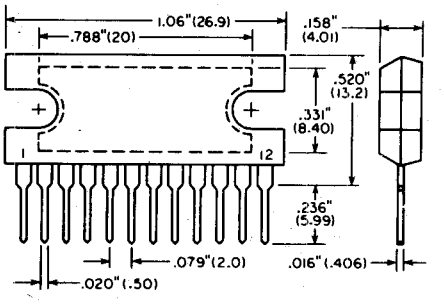

Fig. L57B — 13-Lead Formed SIP

ECG
1802 1804 1851 7083

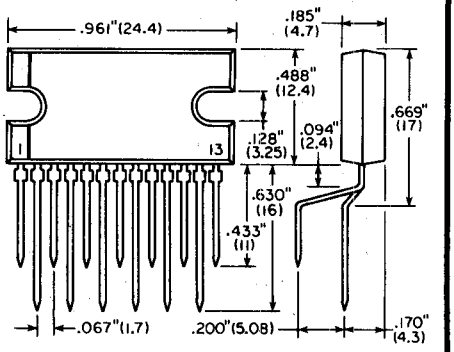

Fig. L58 — 14-Pin SIP

ECG
1377
1637

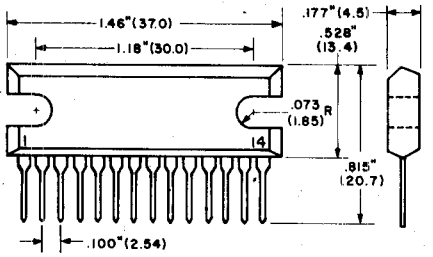

Fig. L59 — 14-Pin SIP

ECG
1364

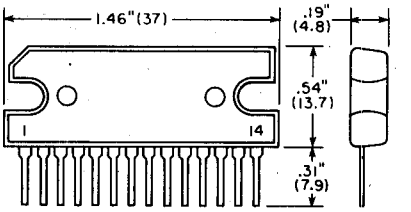

Fig. L60A — 8-Pin SIP-M

ECG
1880 7024 7026 7035 7037

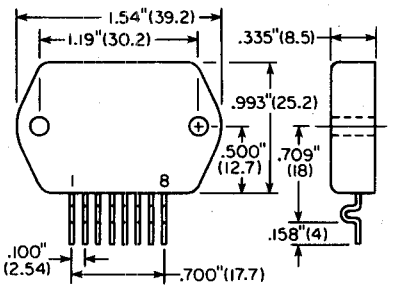

Fig. L60B — 8-Pin SIP-M

ECG
1883

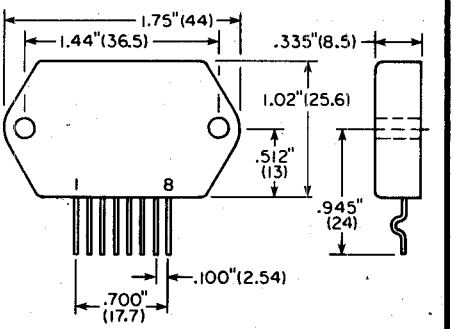

Fig. L61 — 10-Pin SIP

ECG
1350

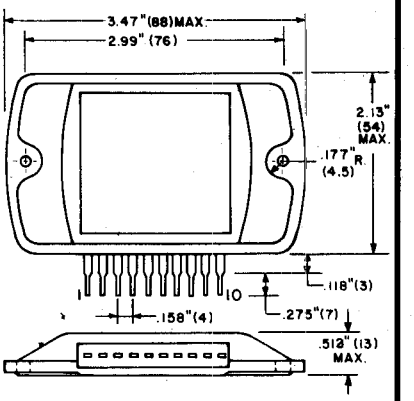

Fig. L62 — 10-Pin SIP-M

ECG
1322
1334
1335
1346

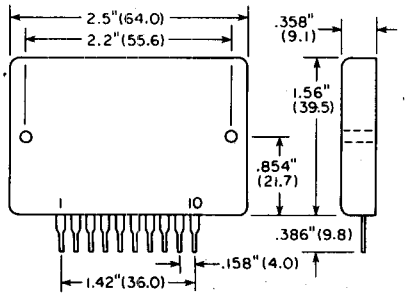

Fig. L63 — 10-Pin SIP-M

ECG
1024
1027
1320
1333

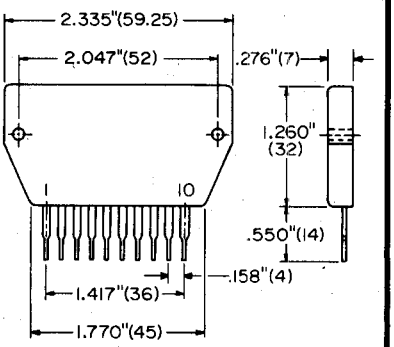

Fig. L64 — 10-Pin SIP-M
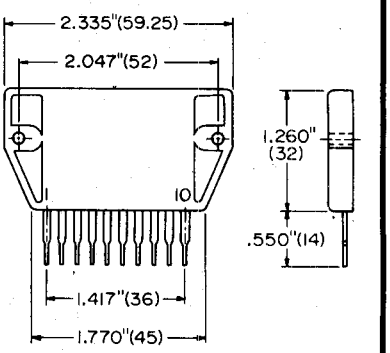
ECG
1279
1280
1281
1282
1321
1357
1358
1360